| Main Specification | | |
|---|---|---|
| Sensor | | AR0234 (1920X1200X3.0um) |
| Max image | | ϕ8 |
| F.No | | 2.8±5% |
| EFL | | 3.37±5% |
| | FOV(°) | IMHx2( mm ) |
| D | 90.3°±5° | 6.792 |
| H | 80.4°±5° | 5.76 |
| V | 55.6°±5° | 3.6 |
| FFL(IR (t=0.3)+Cvoer glass(t=0.4)in ) | | 1.64±0.2 |
| BFL(IR (t=0.3)+Cvoer glass(t=0.4)in ) | | 5.85±0.2 |
| TTL | | 24±0.2 |
| Relative illumination | | 78% |
| TV Distortion | | <1%(D) |
| Structcure | | 5G+2G(ASP) △2 |
| Resolution | | 8.29M |
| CRA | | 9° |
| Resolution | | |
| Axis | | ≥0.4@250lp/mm |
| 0.7Y | T | ≥0.3@250lp/mm |
| | S | ≥0.3@250lp/mm |
| SURFACE QUALITY | | |
| Center | | 60-40 △3 |
| Margin | | 60-40 △3 |

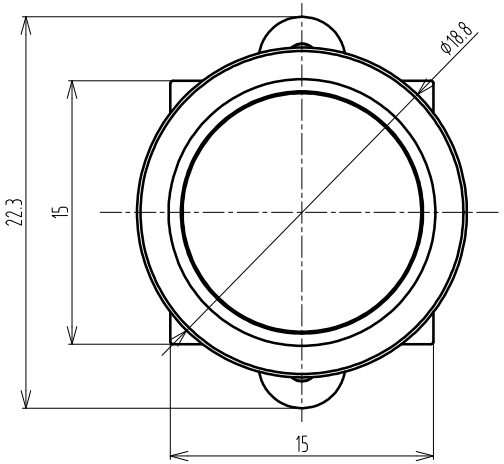


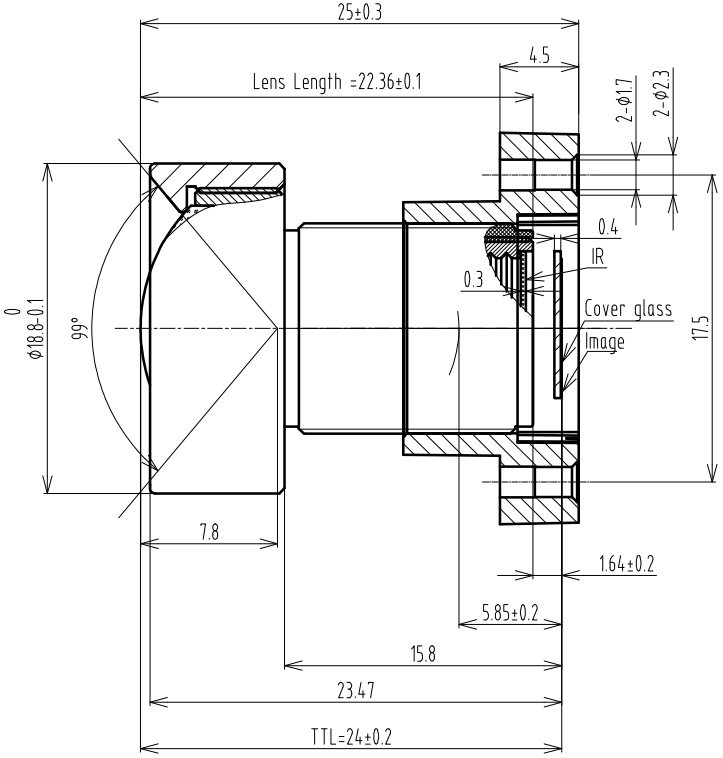


| 版本 | 处数 | 更改文件号 | 担当 | 变更日期 |
|---|---|---|---|---|
| △3 | 2 | CY1601N2024120601 | 刘文斌 | 2024-12-06 |
| △2 | 1 | CY1601N2023070301 | 蒋冬阳 | 2023.7.3 |

TOLERANCE:
. LINEARITY TOLERANCES ±0.05
. ANGULAR TOLERANCES ARE±30'
. DRAFT ANGLES AREA±0.5°/SIDE

三角法

| | | | |
|---|---|---|---|
| 设 计 | 宗刚群 | 2021-03-01 | 名称 |
| 校 对 | | | |
| 审 核 | | | 代号 |
| 批 准 | | | |

材 料(环 保)

| 单位 | 比 例 |
|---|---|
| mm | 2.5:1 |

名称: CY1601N F01 LENS

页 码: 1/1

代号: CY1601N-F01 SPEC

版 本: V03

A4

CHIOPT